BO42(50W)

Design

BO4221 Series Motors are Brushless DC Outrunner motors with 43mm diameter and 21mm height. These Motors are available with sensor and without sensor. Robust Ball bearings ensure excellent service life with ≥5000Hrs. Drivers are also available as an Add-On unit on special request. These motors are available in different speeds and different voltages on special request. In order to reduce motor height, we can use FFC cable also on the special request.

Standard Data

Motor Type		Outrunner Brushless dc motor
Configuration		12N-16P
Ambient Temperature Operation	°C	-40°C to +100°C
Storage & Transport Temperature	°C	-60°C to +120°C
Weight	g	100
Electrical Enclosure	IP	40 (As per IEC 60529)
Life expectancy		≥5000 hours @ Rated Torque

Available Customizations

Sensorless
Inbuilt driver
Customized motor speed
Dust cover (Upto IP 65 **)
22 AWG x 200mm ends tinned & stripped
Customized shaft
Hollow shaft for robotics and gimbal applications

Technical Data

MECHTEX	Physical data	No load data			Data at Rated Torque				Stall	
MODEL No.	Dia x height	Voltage	Speed	Current	Speed	Current	Torque	Power	Torque	Current
	mm	V DC	RPM	mA	RPM	A	cNm	W(out)	cNm	A
BO4221-24a	43 X 21	24	4000	140	2760	1.2	7.5	21	53	7
BO4221-24b	43 X 21	24	6710	230	4990	2.3	8.3	41	78	23

*Other speeds & voltages on special request

** On special request

Dimensional Drawing

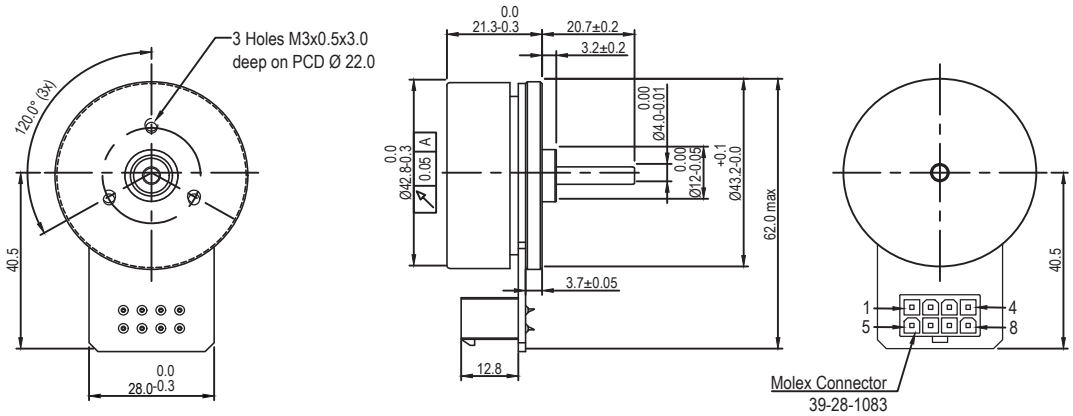

Pin 1	HALL SENSOR 1	HU
Pin 2	HALL SENSOR 2	HV
Pin 3	Vhall 4.2…24VDC	VCC
Pin 4	MOTOR WINDING 3	W
Pin 5	HALL SENSOR 3	HW
Pin 6	GND	GND
Pin 7	MOTOR WINDING 1	U
Pin 8	MOTOR WINDING 2	V